NEXT ASS'Y IA 011 - 00140 (1)

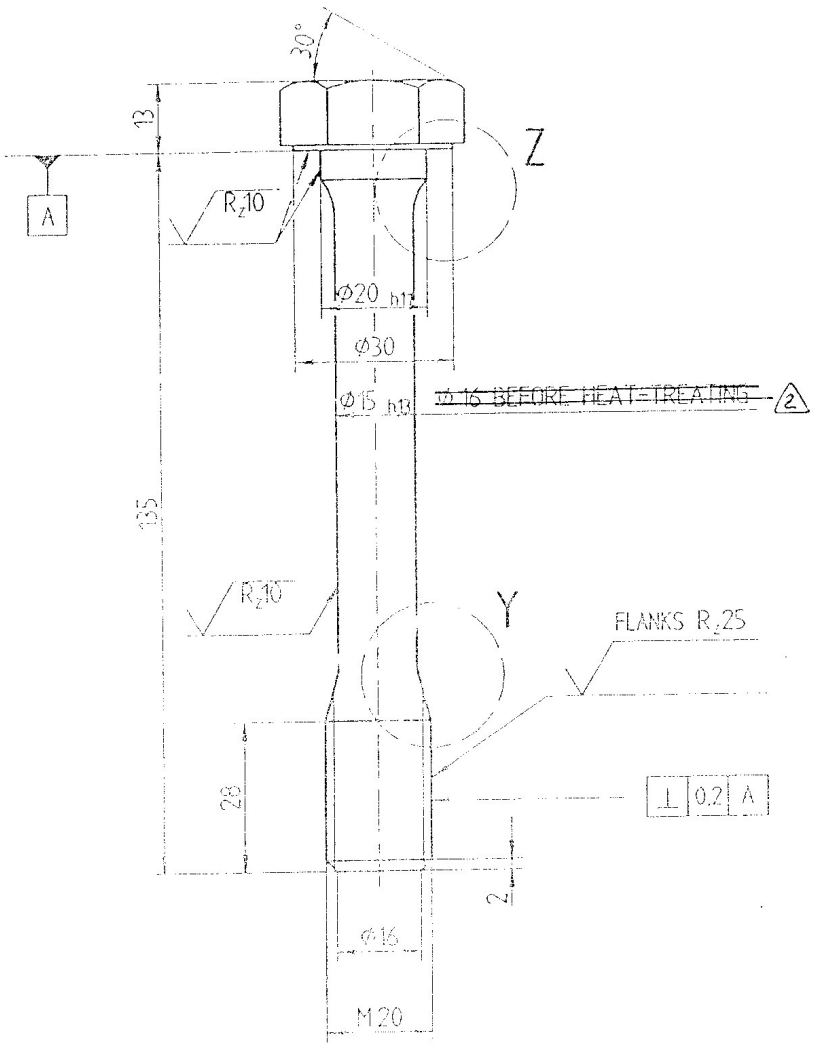

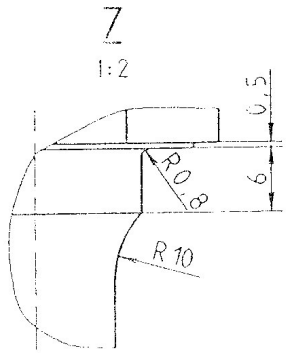

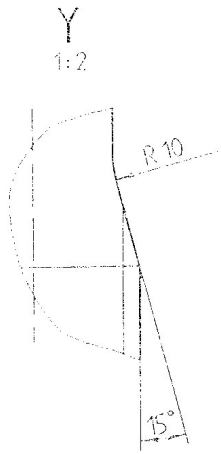

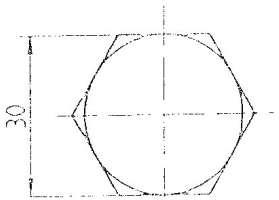

(3) Check absence of cracks through ultrasonic testing & magnetic particle inspection to AS 1171-76

Prime and lacquer antifatique shaft

Quenched + tempered to 800 - 950 mpa

Minimum yield point 600 mpa

ABB Transportation

1st ANGLE PROJECTION

ABB Drawing Title: NECKED DOWN BOLT

Sheet

Ref. Drg. No. IA016-00271 (R3)

GENERAL TOLERANCES	DK	FK	TA
DIN ISO 2768 m L		D 1785	
LINEAR DIMENSIONS, SYMMETRY	Classification No		
DIN 8570 BF WELDMENTS	Gen. Tolerances	Gen. Tolerances	Gen. Tolerances
DIN 6930 g STAMPING			
DIN 6935 COLD BENDING			
DIN 2310 II B THERMAL CUTTING			
DIN 2310 II D PLASMA ARC CUTTING			

Rev	AMENDMENTS	Date	Name
3	ECCN 22051 NOTE ADDED	3.7.95	H.S.
2	ERN 10235 NOTE DELETED	9.9.94	H.S.
1	ERN 10146 MODIFIED FOR DAN-DENONE PROCEDURES	8.8.94	H.S.

1994	Date	Name
Drawn	27.04.	Unzicker
Checked	04.05.	[signature]
Stand		
Dpt	FEK 1	

ABB Henschel AG
Kassel works

Origin 337 - 140 01 - 03

We reserve all rights in this document and in the information contained therein. Reproduction, use or disclosure to third parties without express authority is strictly forbidden. Copyright ABB Henschel AG 1994

MATERIAL: Rd. Bar to AS 1444 - 4140

Scale 1:1 | Weight 0,4 kg

Material / Semiproduct see above (42 CR Mo 4)

Title: Necked - down bolt M 20 x 135

Drawing No. 667 - 140.01 - 03

Sheet 01 / 01 Sh

Supers | Supers by