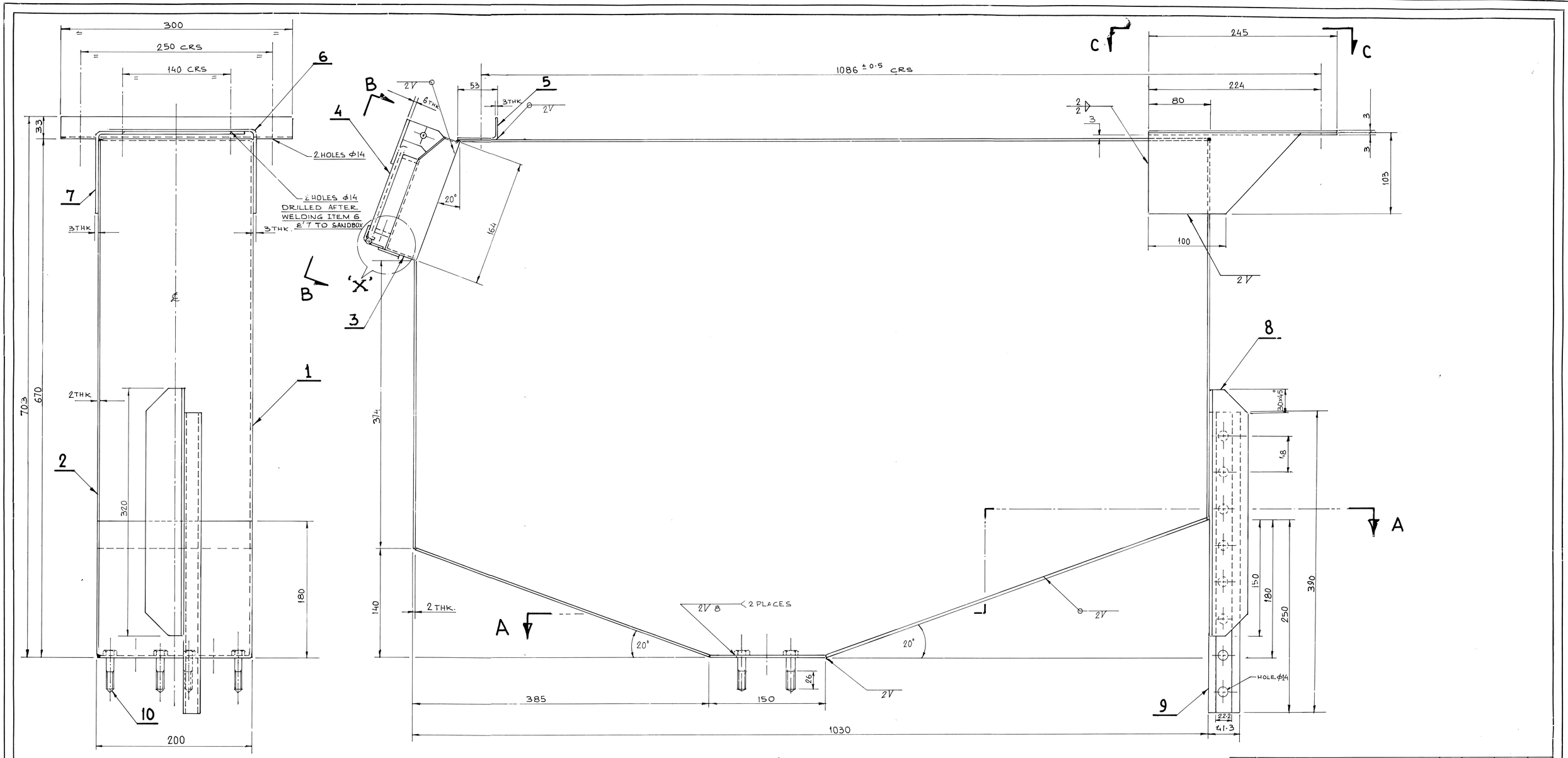

NOTE :

1. SAND BOX ASS'Y - RIGHT HAND LEFT HAND AND DUAL ASS'Y TO BE SUPPLIED IN A SET.
2. JIG & FIXTURE TO BE USED TO MAINTAIN THE GEOMETRY OF THE ASSEMBLY, HOLES ETC.
3. WELD SHARP EDGES CORNERS TO BE GROUND & SMOOTH.
4. SAND BOX ASS'Y TO BE SUPPLIED AS A COMPLETE UNIT INCLUDING HARDWARE.
5. THIS DRAWING IS READ CONJUGATELY WITH DRAWING NO. 1210-07.138-005 FOR SECTION & DETAIL.
6. FOR OTHER TECH DETAILS REFER TECH SPECN NO. CLW/MS/10/038.

निर्देश संख्या REF. NO.	अंग आरेखन संख्या PART DRG. NO.	वर्णन / DESCRIPTION	संख्या/रेल इंजन NO/ LOCO	पदार्थ MATL	विशिष्टि SPECN.	प्रतिभार कि: भा: WT EACH IN KG.
10		M-10 HEX HD. BOLT X 40 LG THK 26 TO IS:1367 A2-70 (Pt 14)	16	STAINLESS STEEL Gr. 304	IS:1364 P-8.8	
9	1210-07. 438-030	CHANNEL UNISTRUT P3300HS	2	ST/ST.	ASTM-A 240 Gr.-304	
8	1210-07. 338-021	ANGLE SUPPORT (PRESSED)	2	ST.ST	-DO-	0.67
7	1210-07. 338-031	REAR MOUNTING ANGLE (O/O SIDE)	2	ST. ST.	ASTM-A 240 Gr.-304	1.435
6	1210-07 338-031.	REAR MOUNTING ANGLE (AS SHOWN)	2	ST. ST.	ASTM-A 240 Gr.-304	1.435
5	1210-07. 438-029	FRONT MOUNTING ANGLE	2	ST. ST.	ASTM-A 240 Gr.-304	0.59
4	1210-07 338-012	LID ASSEMBLY	2	—	—	
3	1210-07 338-010	NECK ASSEMBLY	2	STAINLESS STEEL	ASTM-A 240 Gr.-304	0.77
2	1210-07 338-007	SIDE PLATE	2	STAINLESS STEEL	ASTM-A 240 Gr.-304	
1		SAND BOX	2	STAINLESS STEEL	ASTM-A 240 Gr 304	18.52
A		DUAL SANDBOX ASSEMBLY	2	—	—	33.41

①	DY.CEE /CON/ TU-1	MATL. SPECN. OF REF 8&9 WAS IRS-M-41	
परिवर्तन संख्या ALT. NO.	प्राधिकार ALT. NO.	वर्णन DESCRIPTION	दिनांकित आद्यक्षर DATED/INITIAL

अनिर्दिष्ट सह - सीमा प्रा.मा: 2102 के अनुसार UNSPECIFIED TOLERANCE TO IS : 2102

सतह-रूक्षता का मान मा: मा: 3073 के अनुसार SURFACE ROUGHNESS VALUE TO IS: 3073

पदांक GRADE NUMBER	N1	N2	N3	N4	N5	N6	N7	N8	N9	N10	N11	N12
Ra µm	0.025	0.05	0.1	0.2	0.4	0.8	1.6	3.2	6.3	12.5	25	50
चिह्न SYMBOL	▼▼▼▼			▼▼▼			▼▼			▼		

अभिकल्पित DGN	
जांचा CHD	
अधीक्षक SUPDT	
समीक्षित व.अ. (या/वि.) REVIEWED SR.MEE/	
अनुमोदित उ.पु. विभ (अभि) APPROVED DY.CEE/	
दिनांक DATE	13/2/99
रेखिक अनुपात SCALE	1:2.5
संदर्भ / REF.	

आरेखण संदर्भ REF. ASSLY DRG. NO. IA071-00075

DUAL SAND BOX ASSEMBLY

अभिकल्प एवं विकास केन्द्र CENTRE FOR D & D चित्तरंजन रेल ईंजन कारखाना CHITTARANJAN LOCOMOTIVE WORKS

संस्वरे CAD NO.

1st ANGLE PROJECTION

प्रयोग में USED FOR LOCOS WAP-5 (Bo-2)

आरेखण संख्या DRAWING NO. 1210-07.138-004

ALT. ①

B-24