ALL DIMENSIONS ARE IN mm UNLESS OTHERWISE SPECIFIED.

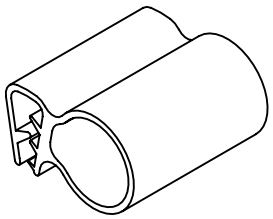

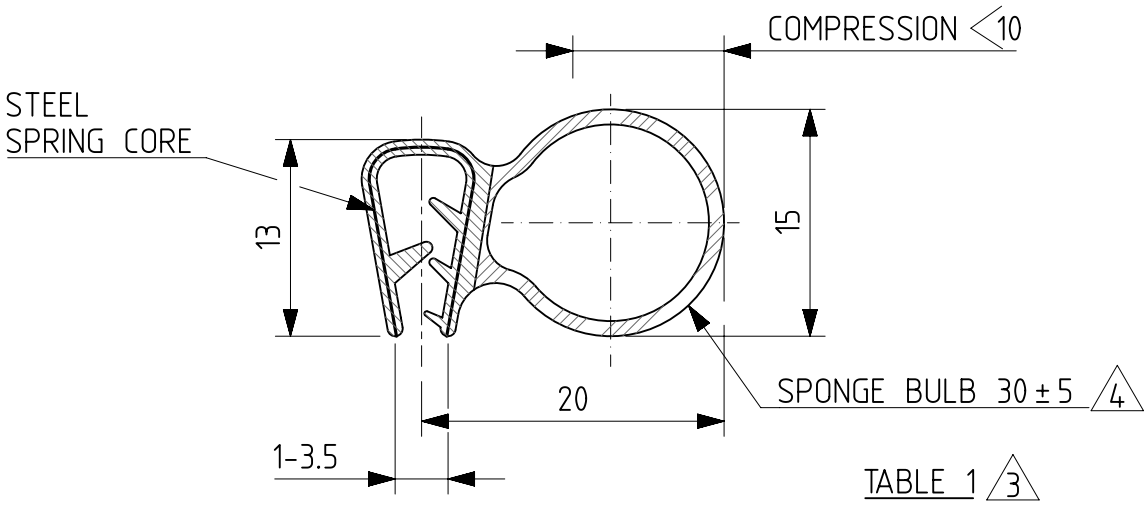

NOTE:-
1. REFER TECH. SPECN. NO. CLW/MS/3/034
   SHORE-A HARDNESS 30±5 (FOR SPONGE BULB)
2. i) THIS DRG. IS ALSO APPLICABLE
   FOR WAP-5 LOCO.
   ii) FOR OTHER TECHNICAL DETAILS
   REFER TECH. SPECN. NO. CLW/MS/10/022.

TABLE 1 3

C&D NO.	QTY/LOCO		C&D NO.
	WAP-5	WAG-9HC	
B315/170	51 mt	17 mt X 4 PCS.	T315/154
B318/030	2 mt	12 mt X 1 PCS.	
TOTAL	53 mt	62mt 5	

1. ALL DIMENSIONS ARE IN mm
2. NEXT LEVEL ASSEMBLY DRG. NO. 1209-10.037-001, 1209-11.039-070, 1209-11.044-100, 1209-11.044-111, & 1210-01.037-001
3. USED FOR LOCO- WAG-9HC, WAP-7 & WAP-5

C&D NO.	QTY./LOCO	C&D NO.	QTY./LOCO
T315/154	62 mt	T323/117	1.7 mt
B315/170	51 mt	T324/121	2.2 mt
B315/233	16 mt	B323/007	5 mt
B318/030	2 mt	B324/025	2 mt

4. UNSPECIFIED TOLERANCE IN THE DIMENSIONS MENTIONED AT DRAWINGS TO BE FOLLOWED AS PER IS;2102(PART 1):1993-TOLERANCE CLASS-MEDIUM OF TABLE-1

1

परिवर्तन संख्या ALT.NO.	प्राधिकार AUTHY	वर्णन DESCRIPTION	दिनांकित आद्यक्षर DATED INITIAL
5	Dy.CEE/D/Conv	QTY./LOCO FOR WAG-9/WAP-7 REDUCED FROM 80m TO 62m	27-09-18
4	DY. CEE/PROJ/CON	SHORE- A HARDNESS 30±5 (FOR SPONGE RUBBER) SHOWN	23-07-14
3	DY. CEE/PROJ/CON	TABLE 1 ADDED FOR DISTRIBUTION OF LENGTH	25-04-13
2	DY.CEE/CON.TU.1	REF. 4 ADDED.	23-02
1	DY.CEE/CON./TQ	NOTE 2 ADDED FOR WAP-5 LOCO & LENGTH 68.0 METERS WAS 63.6 METERS.	

सतह – रुक्षता का मान भा. मा. 3073 / अ. मा. सं. 1302
SURFACE ROUGHNESS VALUE TO IS:3073 / ISO:1302

अनिर्दिष्ट सह्य – सीमा भा. मा. : 2102 / अ. मा. सं. : 2768
UNSPECIFIED TOLEARANCE TO IS : 2102 / ISO : 2768

धातु–वेल्डन चिन्ह भा. मा. : 813 / अ. मा. सं. :2553
WELDING SYMBOLS TO IS:813 / ISO:2553

TOL. CLS.

पदांक GRADE NO.	सं1 N1	सं2 N2	सं3 N3	सं4 N4	सं5 N5	सं6 N6	सं7 N7	सं8 N8	सं9 N9	सं10 N10	सं11 N11	सं12 N12
Rz	0.16-0.3	0.5-0.7	0.9-1.1	1.5-2.0	2.5-3.8	5.0-6.3	9.0-12	16-25	30-40	50-63	75-100	160-250
Ra μm	0.025	0.05	0.1	0.2	0.4	0.8	1.6	3.2	6.3	12.5	25	50
चिन्ह SYMBOL												

अभिकल्पित DGN	
जॉचा व.अ.अ. CHD SSE	
समीक्षित स.वि.अ. / व.वि.अ. REVIEWED AEE / SEE	
अनुमोदित उ.मु.वि.अ. APPROVED DYCEE	
दिनांक DATE	01-06-2022
रैखिक अनुपात SCALE	1:1
संदर्भ / REF.	182-00663 ALT.-

चित्तरंजन रेलइंजन कारखाना
CHITTARANJAN LOCOMOTIVE WORKS, INDIA

पदार्थ MATL	EPDM BLACK
प्रति भार कि. ग्रा. WT. EACH IN KG	
विशिष्टि SPECN	SEE NOTE
वर्णन DESCRIPTION	SELF-GRIPPING SEALING RUBBER (FOR ROOF HATCH ASSLY.)
आरेखण संख्या DRAWING NO.	1209-18.406-089
परिवर्तन संख्या ALTERATION. NO.	5
पर्ण SHEET	1 OF 1
	A4

This document/drawing was prepared by or on behalf of CLW and the copyright belongs to CLW. Reproduction in whole or in part requires prior written consent of CLW. As the drawing incorporates confidential information of CLW its disclosure to third parties also requires CLW's prior written consent.

REDRAWN BY TCS