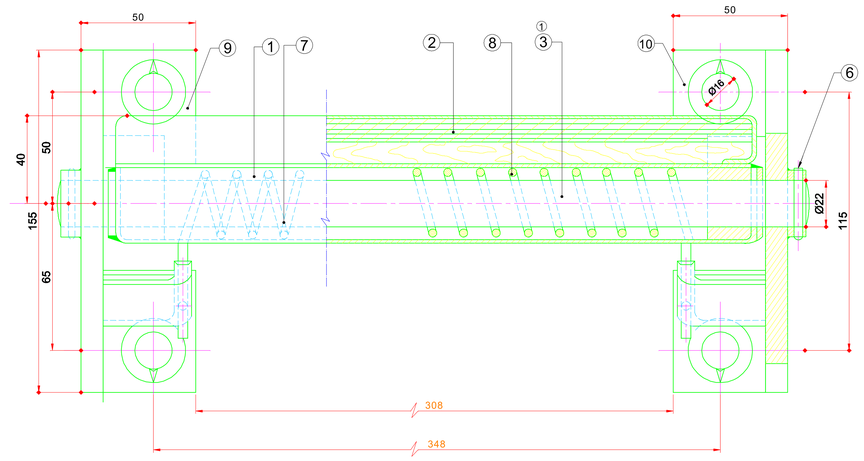

HALF SECTION 'bb'

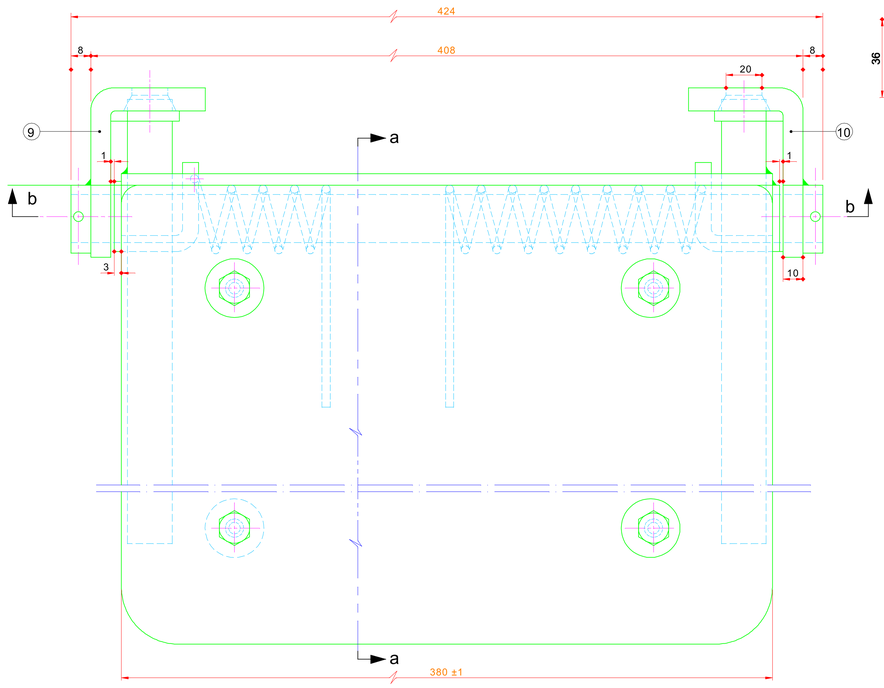

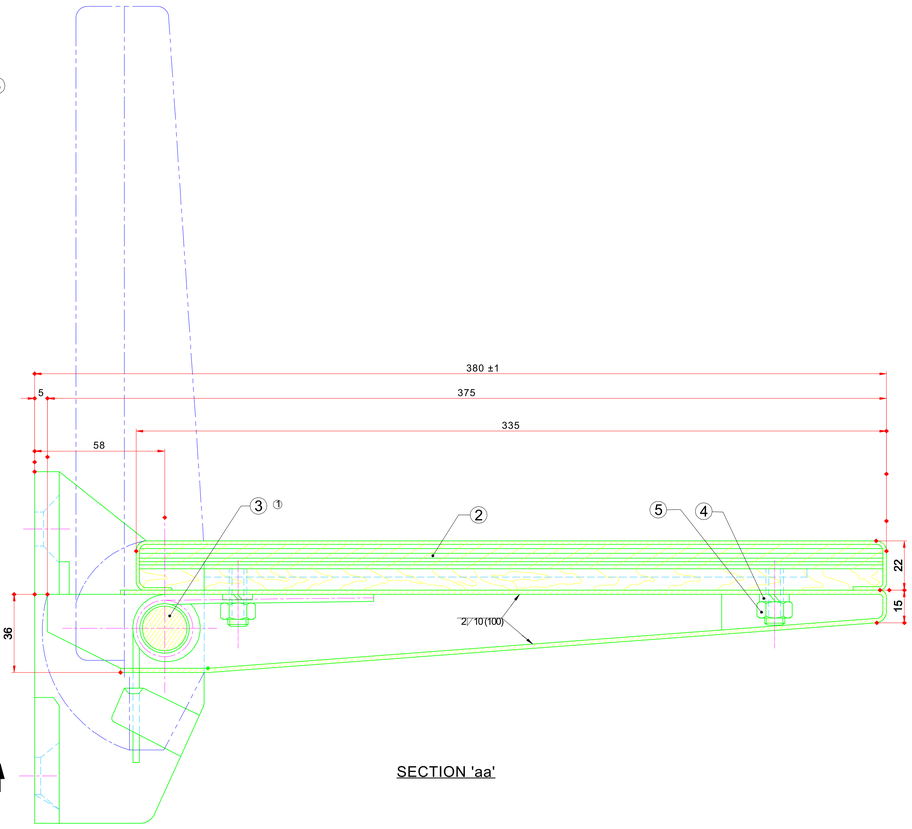

SECTION 'aa'

NOTE:-

1. THIS DRG. IS NOT TO BE FOLLOWED FOR RAJ LOCO ONLY FROM THE LOCO PRODUCTION YEAR 2003-2004 AND ONWARDS DUE TO CHANGE IN DESIGN.

C & D NO. WAG / 6	C & D NO. WAG / 7	C & D NO. WAM / 4R	REF. NO.	C & D. NO.	PART DRG. NO.	DESCRIPTION	NO/ LOCO	MATL	SPECN	WT.
D 346 / 020	P 346 / 130	R 346 / 119	10	F 346 / 298	05/2/38/68	SUPPORT ASSLY.	4	STEEL	—	1.130
D 346 / 015	P 346 / 125	R 346 / 114	9	F 346 / 293	05/2/38/57	SUPPORT ASSLY.	4	STEEL	—	1.130
D 346 / 014	P 346 / 124	R 346 / 113	8	F 346 / 292	05/4/38/56	SPRING (LH)	4	SPG. STEEL	M24/ M25	0.065
D 346 / 013	P 346 / 123	R 346 / 112	7	F 346 / 291	05/4/38/56	SPRING (RH)	4	SPG. STEEL	M24/ M25	0.065
D 346 / 012	P 346 / 122	R 346 / 111	6	F 346 / 290	—	TAPPER PIN Ø 4x30 LG.	8	STEEL	IS:6658	7 —
D 346 / 011	P 346 / 121	R 346 / 110	5	F 346 / 283	—	HEX. NUT M 8	6	STEEL	IS:1364	—
D 346 / 010	P 346 / 120	R 346 / 109	4	F 346 / 288	—	SPRING WASHER M8B	6	SPG. STEEL	IS:5063	—
D 346 / 009	P 346 / 119	R 346 / 147	3	F 346 / 340 / 26	05/3/38/75	SPINDLE	4	STEEL	IS:226, IS:3062	—
D 346 / 008	P 346 / 118	R 346 / 108	2	275	05/1/38/54	SEAT COVERING	4	—	—	—
D 346 / 002	P 346 / 112	R 346 / 102	1	265	05/1/38/53	SEAT ASSLY.	4	—	—	—
D 346 / 001	P 346 / 111	R 346 / 101		F 346 /		DRIVER'S SEAT (ASSLY.)	4	—	—	—

DRAWN	Sd/-	REFERENCE DRG. NO. DRG. NO. 05/1/38/44	CHITTARANJAN LOCOMOTIVE WORKS
CKD. BY			
S/ELDO (M)	Sd/-		
AME(D)			
DY CEE (D)	Sd/-	DRIVER'S SEAT ASSLY.	USED FOR LOCO WAG/7
DATE			
SCALE	1 : 1		DRAWING NO. 05/1/38/45
APPROVAL REF. NO.			

ALT. NO.	AUTHY	DESCRIPTION	DATED INITIAL
7	DY. CEE (D)	MALT. SPEC NO. OF REF. NO. 6 CORRECTED.	
6	DY. CEE (D-I)	THIS ITEM IS DELEDITED FOR RAJ LOCO ONLY. NOTE-1 ADDED.	Sd/-
5	SME (D)	C& D NO FOR WCM5 & CLASS OF LOCO ADDED.	Sd/-
4	SME (D)	C & D NO. & CLASS OF LOCO WAG/7 ADDED.	Sd/-
3	SME (D)	DRG. EINSTATE FOR WAP/ & WAG/5 LOCOS YEAR 95-01 & ONWARDS.	Sd/-
2	SME (D)	WAM / AC ADDED.	Sd/-
1	SME (D)	REF. NO. 3 MODIFIED & DRG. NO. ALTERED.	Sd/-

SURFACE ROUGHNESS VALUE TO IS:3037	NUMBER	N1	N2	N3	N4	N5	N6	N7	N8	N9	N10	N11	N12
	Ra	0.25	0.05	0.1	0.2	0.4	0.8	1.6	3.2	6.3	12.5	25	50
	SYMBOL												

WELDING SYMBOL TO IS : 813

REV. NO.	ZONE	ABRIDGED DESCRIPTION OF REVISION	SIGNATURE & DATE	JOB ORDER NO.
A				
B				
C				
D				

PLEASE NOTE:

PAPER SIZE TO BE CUSTOMISED FOR A2 SHEET IS 620,446

FOR PRINTABLE AREA OF ISOA2 PAPER TRIMMED SIZE 594,420

SHOWING FILLED TRIANGLE AT THE FOUR CORNERS OF THE LAYOUT SHEET

SCANNED AND DIGITIZED FROM DRG. NO.....

OF M/S .....

VIDE DD/DSP WORK ORDER NO.....DATED .....

CD-DISC4\C03&CC\01-----.dwg

ITEM	ITEM DESCRIPTION	NOS. OFF	MATL. SPECIFICATION	UNIT WT. Kg.

SURFACE ROUGHNESS:IS3073:1967(Ra value: μm)

CAST/FORGED/ ROLLED	ROUGH FINISH	SMOOTH FINISH	FINE FINISH	SUPER FINE FINISH
∿	▼	▼▼	▼▼▼	▼▼▼▼
N12=50	N11=25 N10=12.5	N9=6.3 N8=3.2 N7=1.6	N6=0.8 N5=0.4 N4=0.2	N3=0.1 N2=0.05 N1=0.025

BASIC DATA SOURCE LIKE SAMPLE/ SKETCH/ G.A.DRG./ ANY OTHER: SCANNED

ALL SHARP EDGES TO BE CHAMFERED TO 1mm. x45° AND ALL SHAFT FILLETS & UNDERCUTS TO BE RADIUSED TO 1mm. R UNLESS STATED OTHERWISE

GENERAL TOLERANCES FOR LINEAR & ANGULAR M/C DIMENSIONS TO BE AS PER IS:2102(PART 1):1993 CLASS 'm'

STEEL AUTHORITY OF INDIA LTD.

DURGAPUR STEEL PLANT

PLANT DESIGN AND DRAWING DEPARTMENT

DRAFTING CODE REFERENCE

1) IS 10714:1983
2) IS 9609(Part1):1983

FIRST LINE TITLE

SECOND LINE TITLE

THIRD LINE TITLE

AutoCAD FILE NAME :-

JOB ORDER NO. -----

DRN.	-	APP.	-	ANGLE OF PROJECTION: 1ST.	LINEAR DIMENSIONAL UNIT: mm.
TRD.	-	DATE	00.00.00	DRG. No.	A0/01.00.00/00000
CHD.	-	SCALE	- -		REV. -

DRG.NO.,ITEM NO. & MANUFACTURER'S IDENTIFICATION MARK TO BE PROVIDED ON EACH ITEM AT SUITABLE LOCATION OR AT PLACES MARKED 'M'